This document shall not be reproduced in whole or in part or relied upon by third parties for any use whatsoever without the written authority of F. P. McCann Ltd.

DO NOT SCALE, IF IN DOUBT PLEASE ASK.

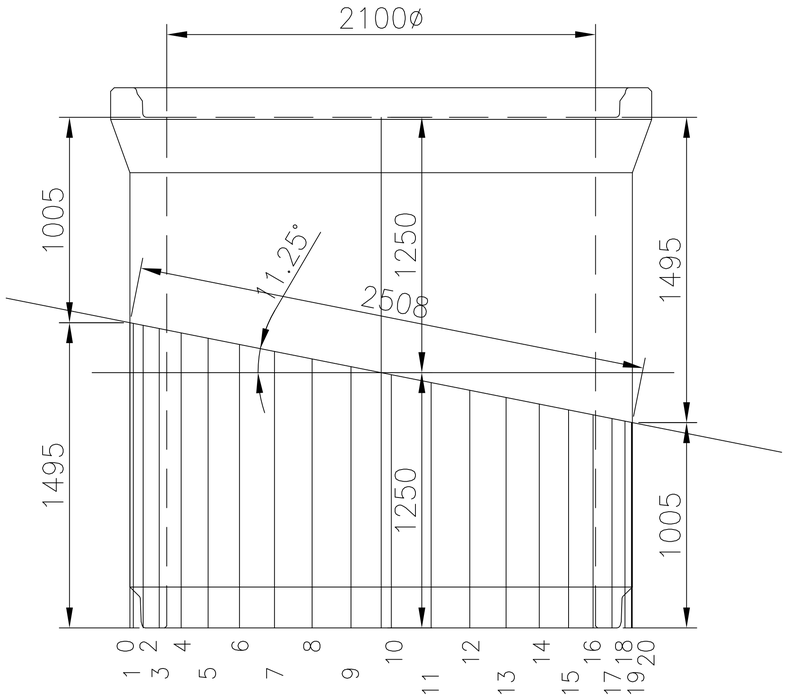

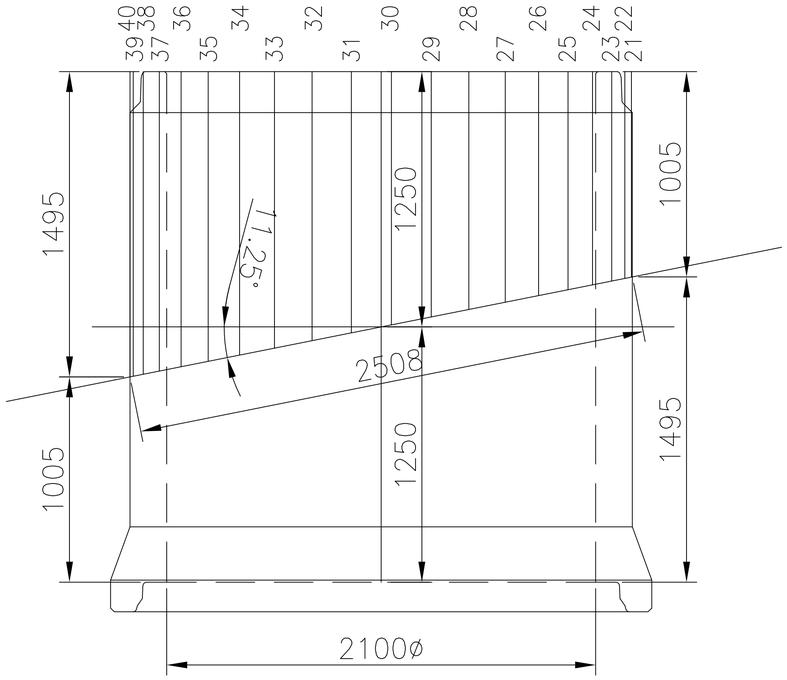

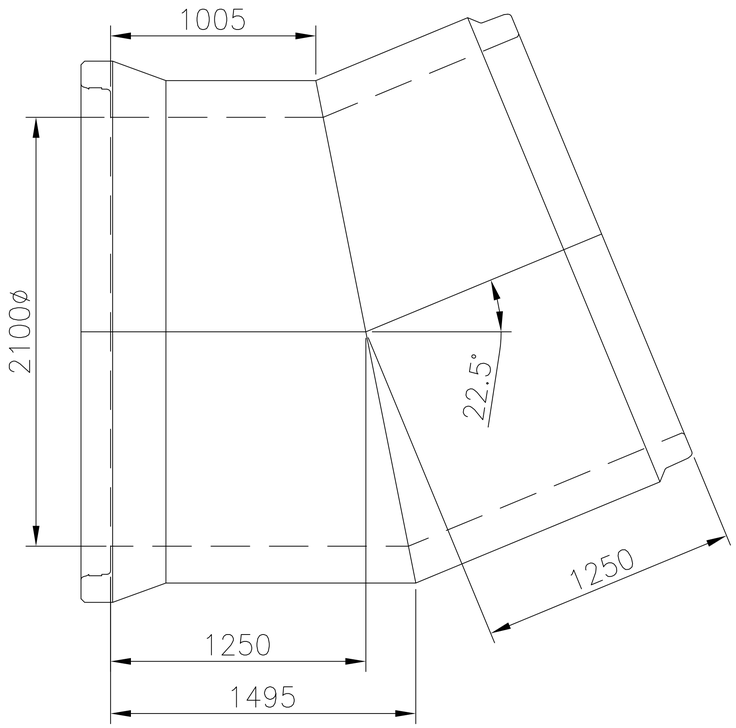

	Dimension from spigot		Dimension from spigot
0	1495	21	1006
1	1491	22	1013
2	1482	23	1025
3	1466	24	1044
4	1445	25	1068
5	1419	26	1097
6	1388	27	1129
7	1354	28	1165
8	1317	29	1201
9	1279	30	1240
10	1240	31	1279
11	1201	32	1317
12	1164	33	1354
13	1128	34	1388
14	1096	35	1419
15	1067	36	1445
16	1044	37	1466
17	1025	38	1482
18	1013	39	1491
19	1006	40	1495
20	1005	–	–

TAKEN AT 200 c/c FROM POINT 0

Notes:
1. ALL DIMS ARE QUALITY CONTROL MEASUREMENTS
2. FOR SPIGOT & SOCKET DETAILS REFER TO DRAWING KN-OC-2100-PIPE
3. PIPE BEND WEIGHT – 9160kg

Rev	Date	Revision detail	By	Chk'd

FP McCann
Knockloughrim Quarry, 3 Drumard Road, Magherafelt, BT45 8QA

Tel: +44 (0)28 7964 2558
Fax: +44 (0)28 7964 4224
www.fpmccann.co.uk

Contract: FP McCann Standard Pipe Bend

Title: DN2100 Easi-Flex Two Piece 22.5° Bend

Scale: 1:10 @ A1
Date: May 2010
Drawn: OOK
Checked:
Status: For Manufacture
Drawing no: KN-BD-2100-22.5-SP
Rev: